PBG PACKAGED GAS BURNERS

Model No.	Capacity (1000 Btu/hr)		Motor HP	Air Static Pressure ("wc)	Air Flow (SCFH)	Gas Flow (SCFH)	Excess Air (%)	Gas Turndown	Flame Length (Inches)
PBG 300	Max.	440	1/3	5.9	4560	425	10	43:1	14
	Min.	10		0.25	950	10	875		
PBG 500	Max.	670	1/3	5.5	6950	650	10	33:1	17
	Min.	21		0.25	1450	20	645		
PBG 750	Max.	890	3/4	6.4	9210	860	10	48:1	20
	Min.	19		0.25	1820	18	940		
PBG 1000	Max.	1290	3/4	5.5	13340	1245	10	42:1	23
	Min.	31		0.25	2840	30	870		
PBG 2000	Max.	2265	3/4	5.4	23500	2190	10	73:1	45
	Min.	31		0.2	4520	30	1450		
PBG 3000	Max.	2550	3/4	4.8	26400	2465	10	46:1	48
	Min.	55		0.2	5400	53	945		
PBG 5000	Max.	4660	3	6.0	48300	4510	10	46:1	64
	Min.	101		0.1	6200	98	550		

Notes:
1. Capacities based on integral blower with 60Hz motor, natural gas HHV of 1034 Btu/ft^3 and 0.59 S.G., and stoichiometric air/gas ratio of 9.74:1 with burner firing into chamber under no pressure; for applications under positive or negative pressure (i.e., back pressure or vacuum), consult factory for re-rated capacity.
2. Air and gas flows based on 60°F.
3. Air static pressure measured at burner body air pressure tap.
4. For altitudes above sea level, consult factory for re-rated capacity.
5. Flame lengths are based on the straight combustor tube firing into a chamber without forced air flow.

(See Reverse Side for Metric Capacities)

In accordance with Hauck's commitment to Total Quality Improvement, Hauck reserves the right to change the specifications of products without prior notice.

HAUCK MANUFACTURING CO., P.O. Box 90 Lebanon, PA 17042-0090 717-272-3051
Fax: 717-273-9882

METRIC CAPACITIES

PBG PACKAGED GAS BURNERS

Model No.	Capacity (kW)		Motor kW	Air Static Pressure (Pa)	Air Flow (Nm^3/hr)	Gas Flow (Nm^3/hr)	Excess Air (%)	Gas Turndown	Flame Length (mm)
PBG 300	Max.	100	0.25	1019	102	9.5	10	35:1	355
	Min.	3		43	21.2	0.27	710		
PBG 500	Max.	150	0.25	950	155	14.5	10	27:1	430
	Min.	5		43	32.4	0.54	520		
PBG 750	Max.	200	0.56	1106	206	19.2	10	40:1	510
	Min.	5		43	40.6	0.48	770		
PBG 1000	Max.	280	0.56	950	298	27.8	10	35:1	585
	Min.	8		43	63.4	0.80	710		
PBG 2000	Max.	500	0.56	933	525	49.0	10	61:1	1140
	Min.	8		35	101	0.80	1190		
PBG 3000	Max.	560	0.56	829	589	55.0	10	39:1	1220
	Min.	14		35	121	1.42	770		
PBG 5000	Max.	1030	2.24	1037	1078	100.6	10	38:1	1630
	Min.	27		17	138	2.63	440		

Notes:
1. Capacities based on integral blower with 50Hz motor, natural gas LHV of 36.74 MJ/Nm^3 and 0.59 S.G., and a stoichiometric air/gas ratio of 9.74:1 with burner firing into chamber under no pressure; for applications under positive or negative pressure (i.e., back pressure or vacuum), consult factory for re-rated capacity.
2. Air and gas flows based on 0°C.
3. Air static pressure measured at burner body air pressure tap.
4. For altitudes above sea level, consult factory for re-rated capacity.
5. Flame lengths are based on the straight combustor tube firing into a chamber without forced air flow.

In accordance with Hauck's commitment to Total Quality Improvement, Hauck reserves the right to change the specifications of products without prior notice.

PBG PACKAGED GAS BURNER

BASIC BURNER AND MENU-BUILT OPTIONS

PBG300 - PBG1000

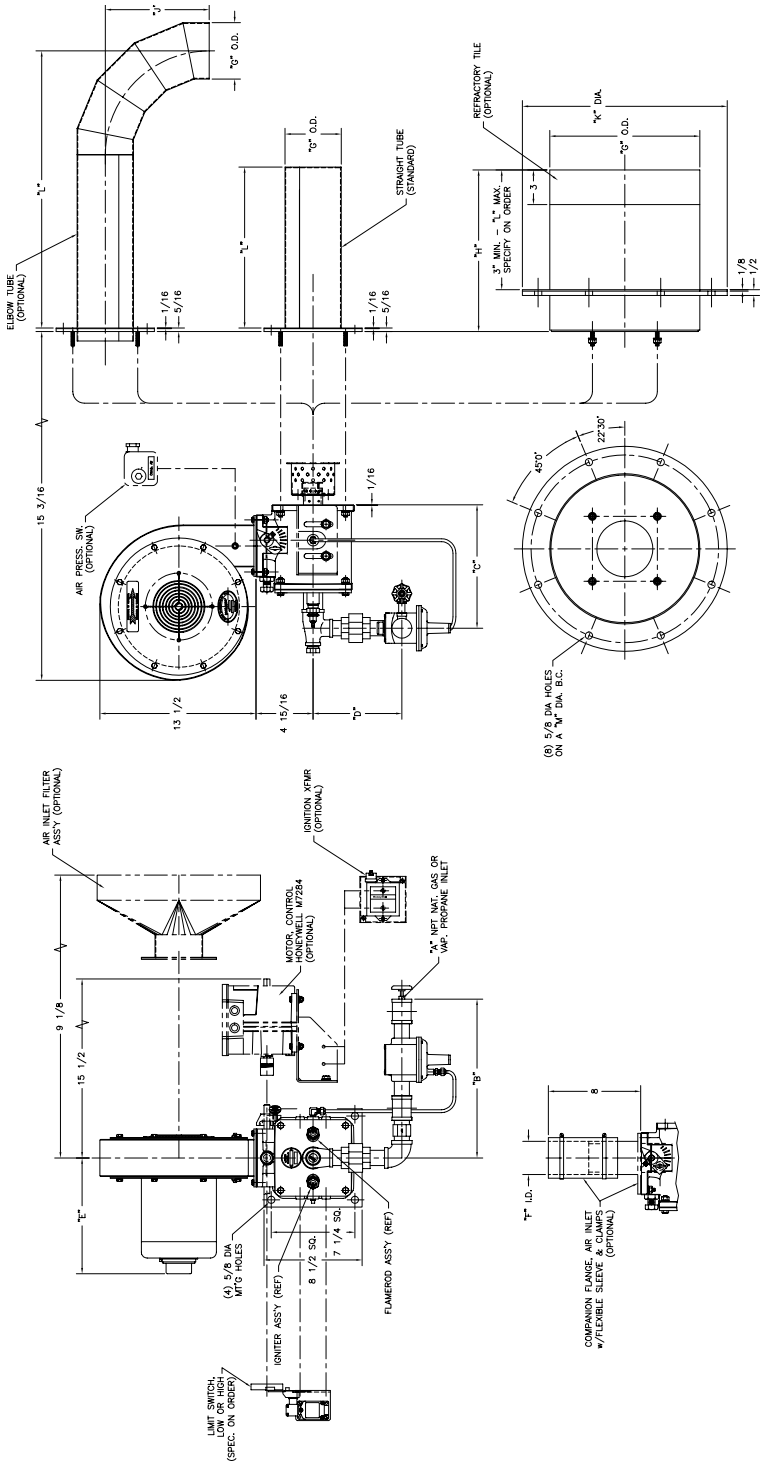

MODEL		"A"	"B"	"C"	"D"	"E"	"F"	"G"	"H"	"J"	"K"	"L"	"M"
PBG 300C	STRAIGHT TUBE	3/4 NPT.	11–1/2	9–3/4	6–7/16	9–7/8	2–7/8	3–3/4	—	—	—	10	—
	ELBOW TUBE							12	10	6	17–1/2	9	15–3/4
	REFRACTORY TILE									—		17	
PBG 500C	STRAIGHT TUBE	3/4 NPT.	11–1/2	9–7/8	6–7/16	9–7/8	2–7/8	4–1/2	—	—	—	12	—
	ELBOW TUBE									6		19	
	REFRACTORY TILE							12	12	—	17–1/2	11	15–3/4
PBG 750C	STRAIGHT TUBE	1 NPT.	13 3/4	10–11/16	7–11/16	10–1/4	3–1/2	4–7/8	—	—	—	14	—
	ELBOW TUBE									9		24	
	REFRACTORY TILE							13	14	—	17–3/4	13	16–1/4
PBG 1000C	STRAIGHT TUBE	1 NPT.	13 3/4	10–11/16	7–11/16	10–1/4	3–1/2	5–9/16	—	—	—	14	—
	ELBOW TUBE									9 3/4		24	
	REFRACTORY TILE							13	14	—	17–3/4	13	16–1/4

CY6846

(See Reverse Side for PBG2000 – PBG5000)

In accordance with Hauck's commitment to Total Quality Improvement, Hauck reserves the right to change the specifications of products without prior notice.

HAUCK MANUFACTURING CO., P.O. Box 90 Lebanon, PA 17042-0090 717-272-3051
Fax: 717-273-9882

BASIC BURNER AND MENU-BUILT OPTIONS
PBG2000 - PBG5000

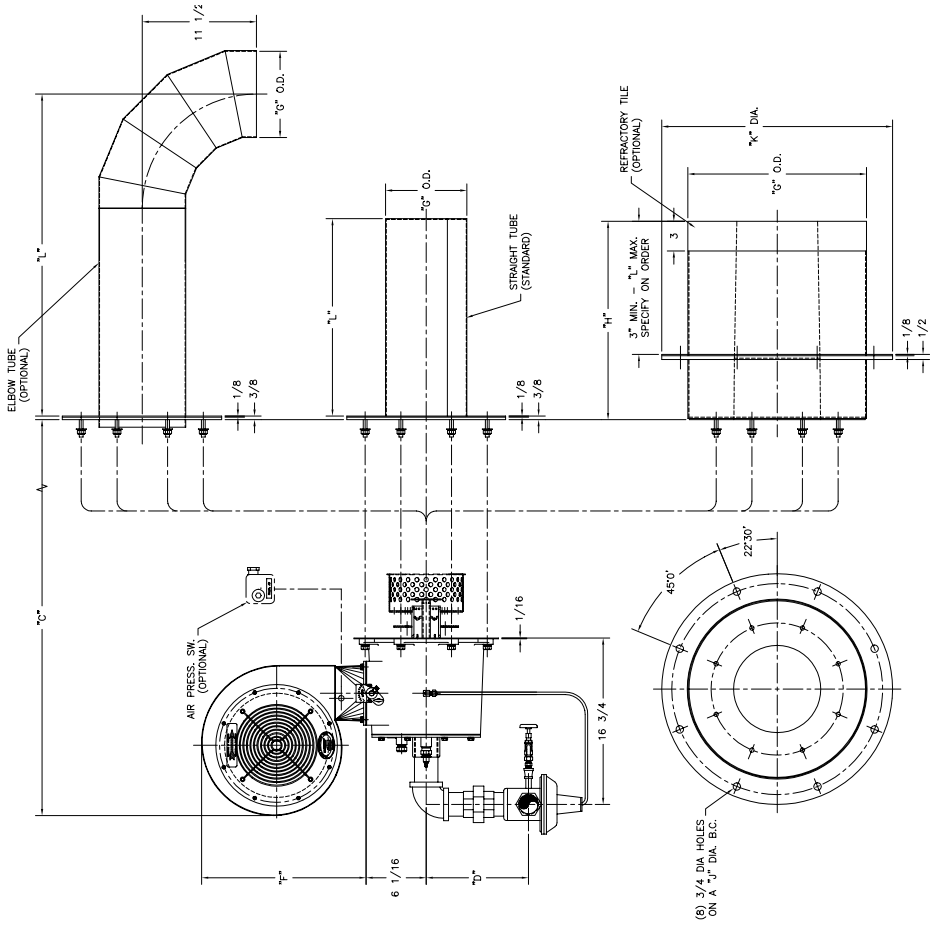

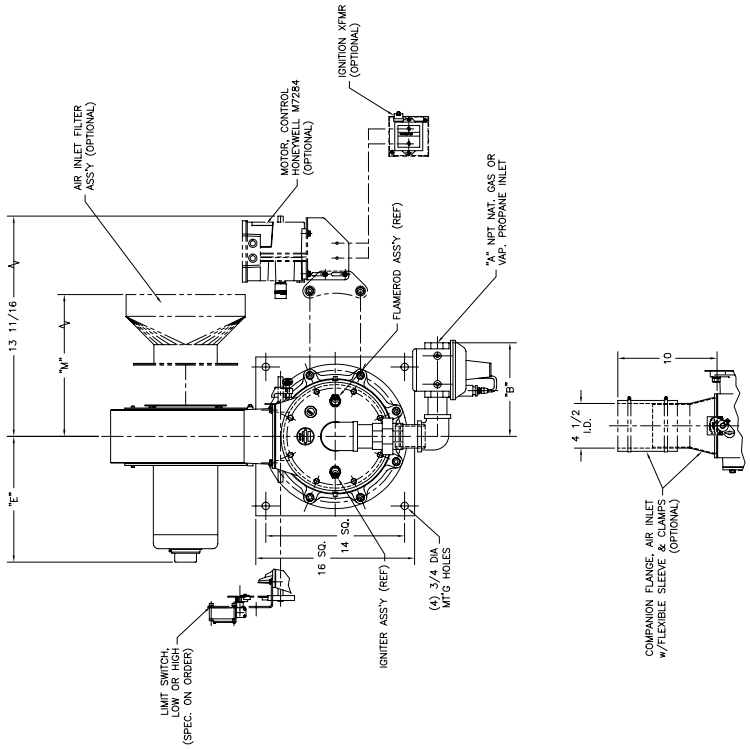

MODEL		"A"	"B"	"C"	"D"	"E"	"F"	"G"	"H"	"J"	"K"	"L"	"M"
PBG 2000B/3000B	STRAIGHT TUBE	1 1/2 NPT.	10	17 7/8	10 5/16	12 11/16	16 9/16	8 1/4	—	—	—	20	10
	ELBOW TUBE							16	18	19 1/4	21 1/4	32 1/2	
	REFRACTORY TILE											17	
PBG 5000B	STRAIGHT TUBE	2 NPT.	12 3/4	22 5/16	10 5/8	13 5/8	19 1/2	8 3/4	—	—	—	20	15 7/16
	ELBOW TUBE							18	20	21 1/4	23 1/4	32 1/2	
	REFRACTORY TILE											19	

CY6847

PBG PACKAGED GAS BURNER

NFPA CONFIGURATION

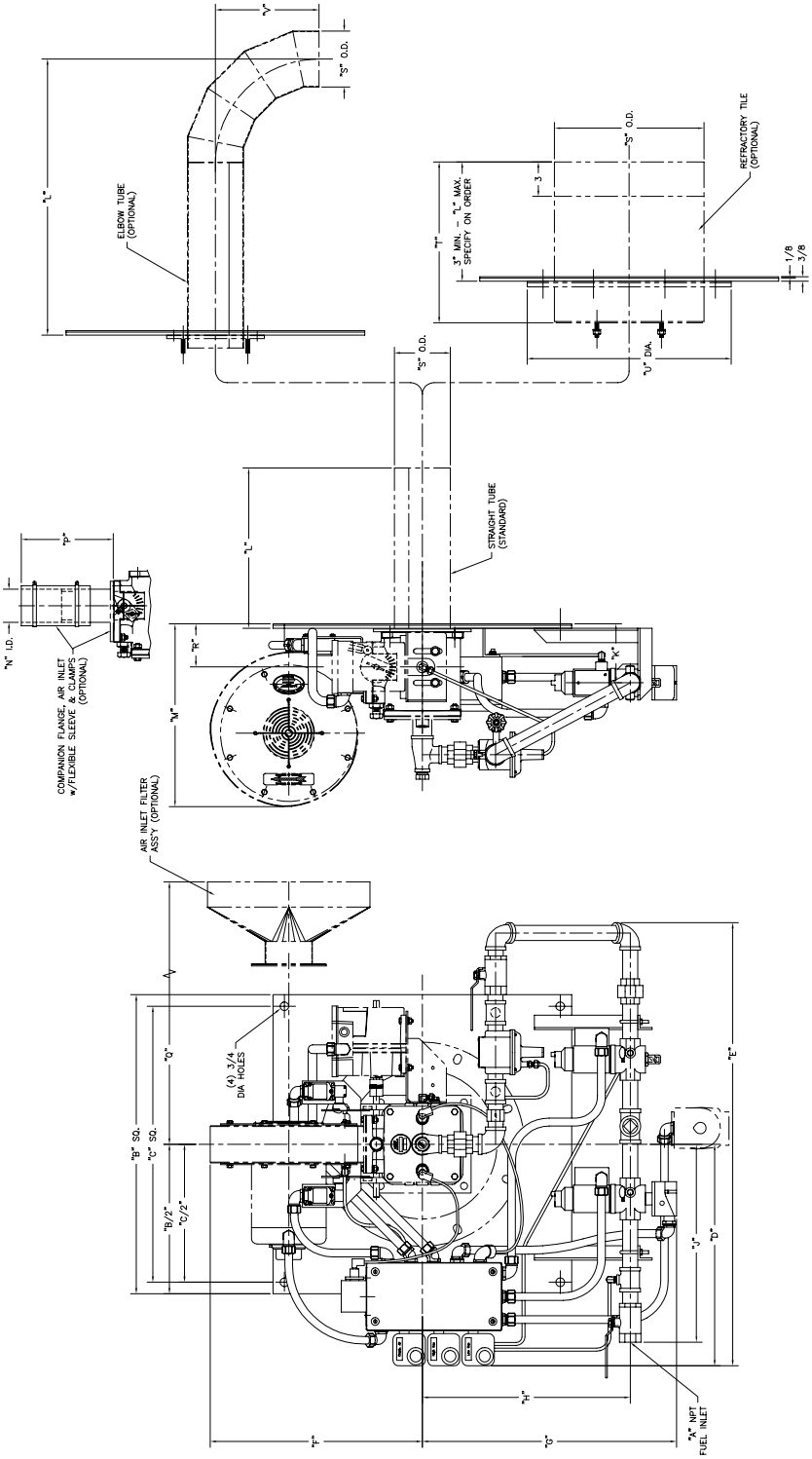

MODEL		"A"	"B"	"C"	"D"	"E"	"F"	"G"	"H"	"J"	"K"	"L"	"M"	"N"	"P"	"Q"	"R"	"S"	"T"	"U"	"V"
PBG 300C	STRAIGHT TUBE	3/4 NPT.	26	24	19 1/4	36 3/8	18 7/16	22 5/8	18 5/8	18 1/16	5 1/8	10	15 7/8	2 7/8	8	9 1/8	3 3/4	3–3/4	—	—	—
	ELBOW TUBE											17	15–3/4				12 3/8	12	10	17–1/2	6
	REFRACTORY TILE											9									—
PBG 500C	STRAIGHT TUBE	3/4 NPT.	26	24	19 1/4	36 3/8	18 7/16	22 5/8	18 5/8	18 1/16	5 1/8	12	15 7/8	2 7/8	8	9 1/8	3 3/4	4–1/2	—	—	—
	ELBOW TUBE											19									6
	REFRACTORY TILE											11	15–3/4				14 3/8	12	12	17–1/2	—
PBG 750C	STRAIGHT TUBE	1 NPT.	26	24	19 1/4	38 1/2	18 7/16	22 1/8	18 1/16	17 1/4	5 1/8	14	15 7/8	3 1/2	8	9 1/8	3 3/4	4–7/8	—	—	—
	ELBOW TUBE											24									9
	REFRACTORY TILE											13	16–1/4				16 3/8	13	14	17–3/4	—
PBG 1000C	STRAIGHT TUBE	1 NPT.	26	24	19 1/4	38 1/2	18 7/16	22 1/8	18 1/16	17 1/4	5 1/8	14	15 7/8	3 1/2	8	9 1/8	3 3/4	5–9/16	—	—	—
	ELBOW TUBE											24									9 3/4
	REFRACTORY TILE											13	16–1/4				16 3/8	13	14	17–3/4	—
PBG 2000B/3000B	STRAIGHT TUBE	1 1/2 NPT.	30	28	21	41 7/8	22 5/8	22 1/32	17 5/16	23	5 3/8	20	18 9/16	4 1/2	10	10	6 1/4	8 1/4	—	—	—
	ELBOW TUBE											32 1/2									11 1/2
	REFRACTORY TILE											17	16–1/4				22 7/8	16	18	21 1/4	—
PBG 5000B	STRAIGHT TUBE	2 NPT.	30	28	21	44 15/16	25 9/16	22 3/4	17 9/16	24 3/8	5 5/8	20	22 11/16	4 1/2	10	15 7/16	6 1/4	8 3/4	—	—	—
	ELBOW TUBE											32 1/2									11 1/2
	REFRACTORY TILE											19	16–1/4				24 7/8	18	20	23 1/4	—

CY6848

Note: Consult Factory for Certified Dimensions.

In accordance with Hauck's commitment to Total Quality Improvement, Hauck reserves the right to change the specifications of products without prior notice.

HAUCK MANUFACTURING CO., P.O. Box 90 Lebanon, PA 17042-0090 717-272-3051
Fax: 717-273-9882